NEMACO™

Nemaco.com

NEMA 4/12 - ENCLOSURE
19" RACKMOUNT - 42U HEIGHT
FLOOR MOUNT

78" H x 48" W x 48" D
4 DOOR DESIGN

c UL us LISTED

FILE NUMBER: E507642

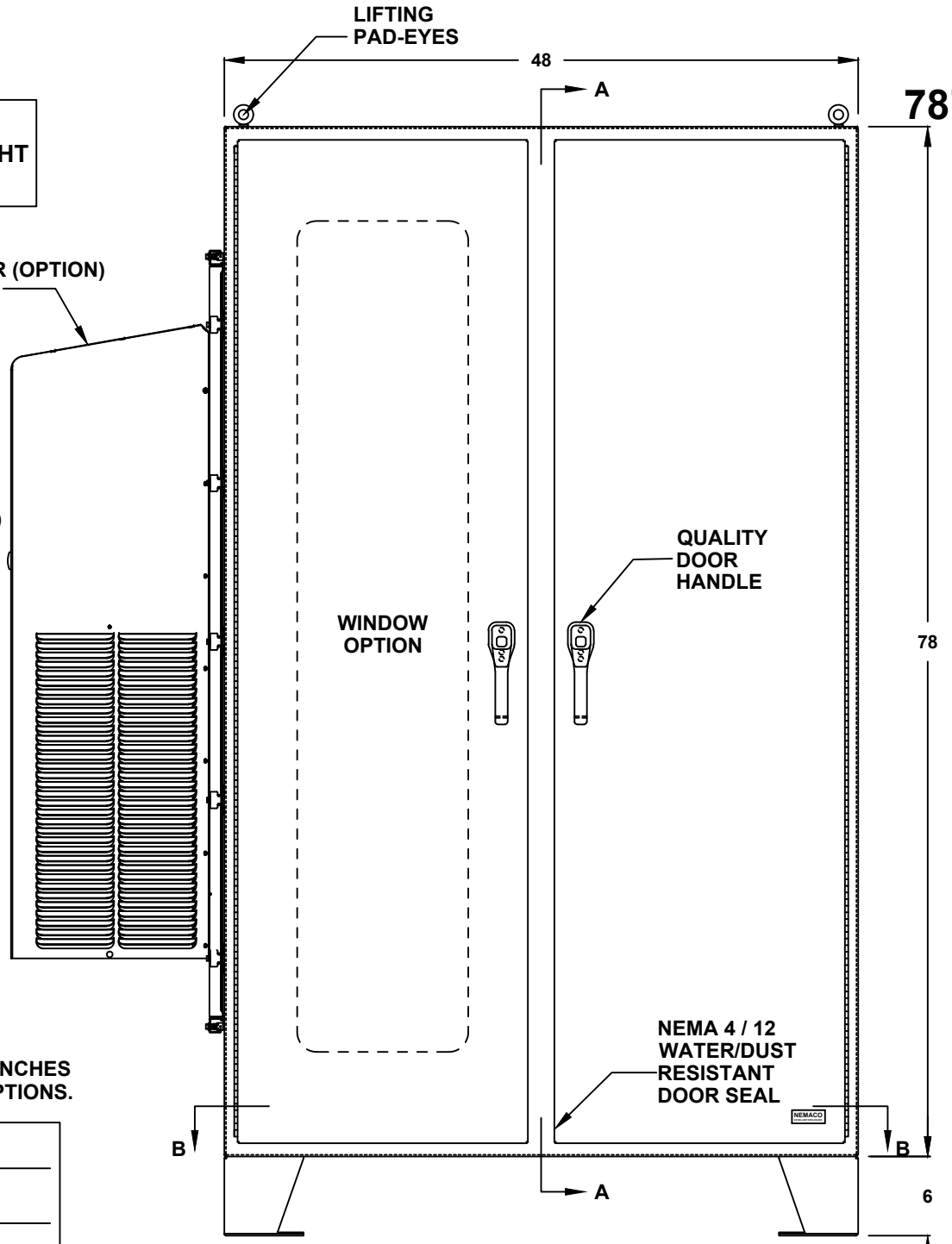

FRONT VIEW

ENCLOSURE MATERIAL
- ☐ POWDER COATED STEEL (CS)
- ☐ POWDER COATED ALUMINUM (AL)

POWDERCOAT COLOR
- ☐ WHITE
- ☐ LIGHT GRAY ANSI 70
- ☐ DARK GRAY ANSI 61 (STANDARD)
- ☐ BLACK
- ☐ CUSTOM _____

ENCLOSURE CONSTRUCTION
- ☐ 14 GA THK.
- ☐ 12 GA THK.

ENCLOSURE DOOR HINGE
- ☐ CONTINUOUS PIANO HINGE (STANDARD)
- ☐ REMOVABLE LIFT OFF HINGE

LIFTING EYES
- ☐ WELDED PADEYES (STANDARD)
- ☐ REMOVABLE PADEYES

***WINDOW OPTIONS**
- ☐ TINTED WINDOW
- ☐ TEMPERED GLASS
- ☐ NOT REQUIRED

DOOR HANDLES
- ☐ PADLOCK PROVISION (STANDARD)
- ☐ KEYLOCK (OPTION)

FLOOR KIT
- ☐ 6" HT. (STANDARD)
- ☐ 8" HT.
- ☐ 10" HT.
- ☐ 12" HT.
- ☐ CUSTOM _____

*NOTE: UL & NON-UL OPTIONS AVAILABLE

ALL DIMENSIONS ARE ESTIMATED IN INCHES AND MAY VARY DUE TO SELECTED OPTIONS.

COMPANY NAME

APPROVED (PRINTED NAME)

SIGNATURE DATE

NEMACO™ ©2023

N4-784848-F2DDXX19 (X2)

NEMACO™

Nemaco.com

78" H x 48" W x 48" D
4 DOOR DESIGN

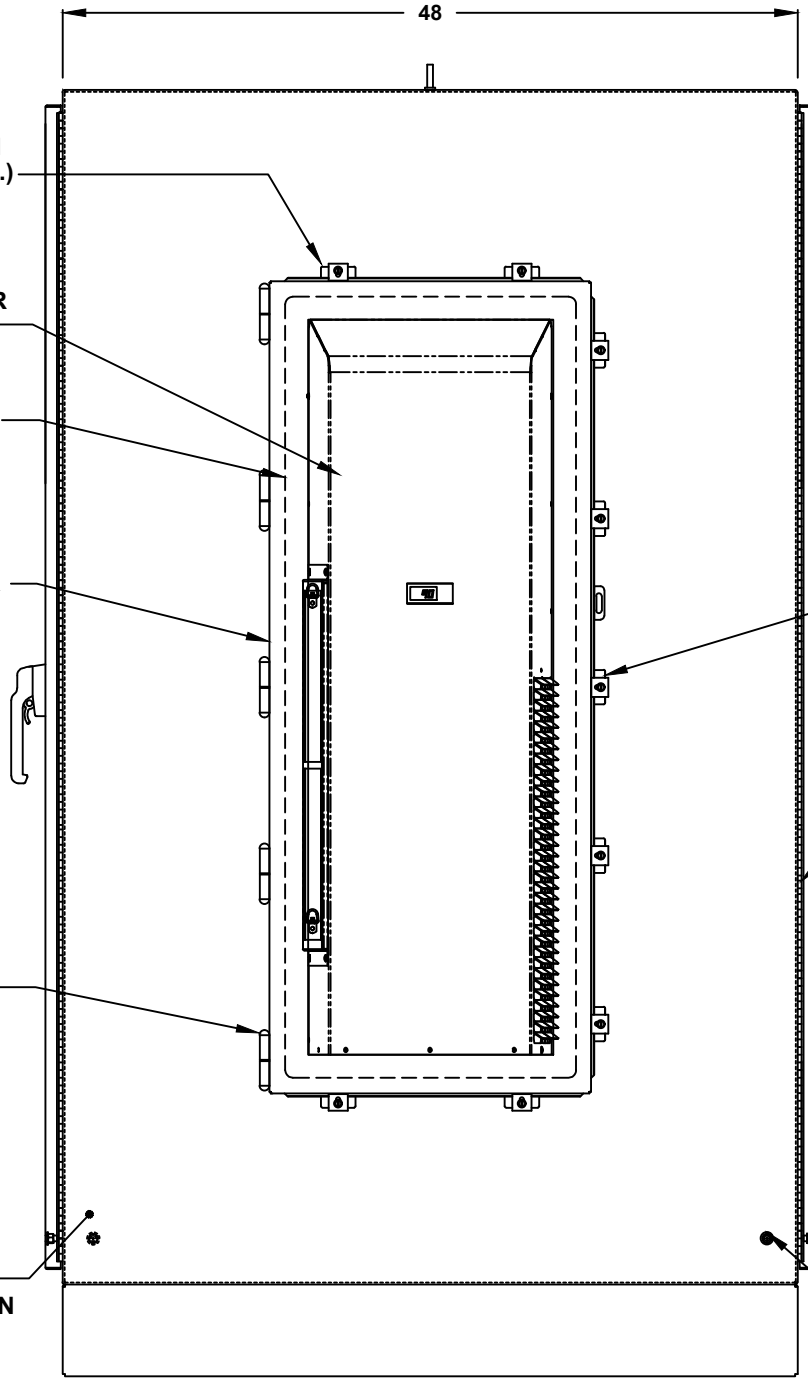

AIR CONDITIONER
- ☐ 1000 BTU
- ☐ 2000 BTU
- ☐ 3000 BTU
- ☐ 4000 BTU
- ☐ 5000 BTU
- ☐ 6000 BTU
- ☐ 8000 BTU
- ☐ 10000 BTU
- ☐ 12000 BTU
- ☐ 15000 BTU
- ☐ 20000 BTU
- ☐ SPECIFY _____
- ☐ NOT REQUIRED

A/C VOLTAGE/ HZ
- ☐ 115 VOLTS
- ☐ 230 VOLTS
- ☐ 480 VOLTS
- ☐ 60 HZ
- ☐ 50 HZ
- ☐ 48 VDC (CS011 / NE040 A/C ONLY)

A/C INTEGRATED HEATER
- ☐ 350 WATTS (CS011 A/C ONLY)
- ☐ 500 WATTS (C3020)
- ☐ 1000 WATTS
- ☐ EXTERNAL HEATER

ADDITIONAL A/C OPTIONS
- ☐ CORROSION PROTECTION PACKAGE
- ☐ DRY CONTACT (OUTPUT SIGNAL)
- ☐ 2" DEEP FILTERS
- ☐ PROXIMITY SWITCH (ON/OFF)

AIR CONDITIONER- SCADA
- ☐ MOBUS RTU 485 (2 WIRE) REMOTE NETWORK ETHERNET CONNECTION
- ☐ MOBUS GATEWAY ADD-ON

SUN REFLECTIVE SOLUTION
- ☐ TOP SUNSHIELD COVER

THERMAL SPECIFICATIONS
- ☐ OUTSIDE (AMBIENT) _____°F
- ☐ INTERIOR TEMP. _____°F
- ☐ HEAT LOAD (WATTS) _____
- ☐ SUN / SHADE _____

ENCLOSURE INSULATION
- ☐ 1/2 RADIANT BARRIER (STANDARD)
- ☐ 3/4 RADIANT BARRIER
- ☐ 1 RADIANT BARRIER
- ☐ NOT REQUIRED

A/C SERVICE DOOR
- ☐ INSTALL A/C SERVICE DOOR
- ☐ NOT REQUIRED

A/C SERVICE DOOR HINGE
- ☐ REMOVABLE HINGE
- ☐ CONTINUOUS HINGE

A/C ADAPTOR PLATE
- ☐ INSTALL A/C ADAPTOR PLATE
- ☐ NOT REQUIRED

LEFT SIDE

NEMACO™ ©2023

N4-784848-F2DDXX19 (X2)

NEMACO™

Nemaco.com

78" H x 48" W x 48" D
4 DOOR DESIGN

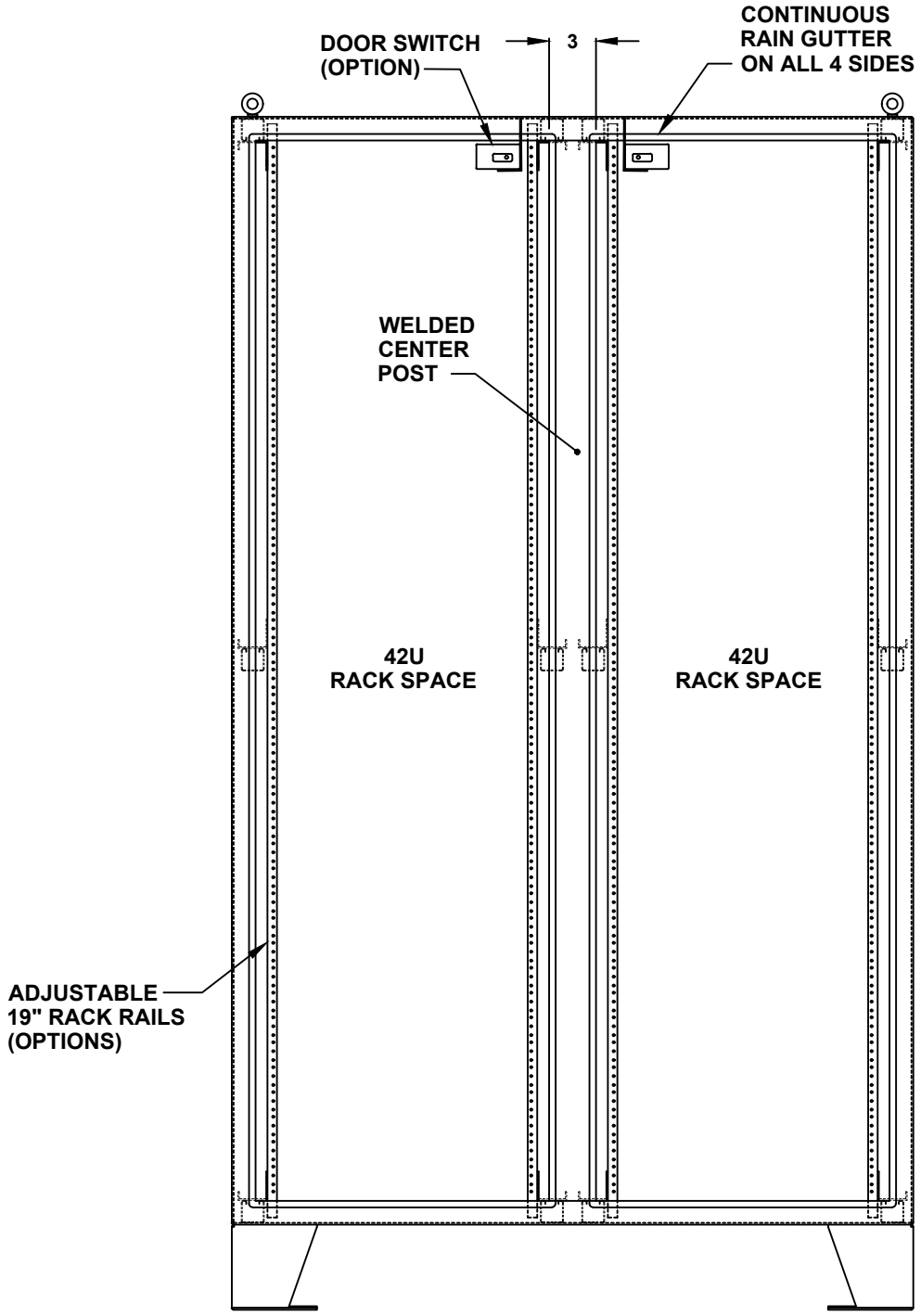

FRONT VIEW WITH DOOR REMOVED

DOOR OPTIONS

- ☐ DOOR SWITCH
  - ☐ 10A (STANDARD)
  - ☐ 16A
- ☐ PRINT POCKET

CENTER POST

- ☐ WELDED (STANDARD)
- ☐ REMOVEABLE

RACK RAIL POST

- ☐ QTY 4 POST
- ☐ QTY 8 POST (REARDOOR REQUIRED)

RACK RAIL MATERIAL

- ☐ POWDER COATED STEEL (STANDARD)
- ☐ 304 STAINLESS STEEL (HEAVY DUTY)

RACK RAIL MOUNTING HOLES

- ☐ #10-32 TAP (STANDARD)
- ☐ #1/4-20 TAP
- ☐ 3/8 SQUARE

NEMACO™ ©2023

78" H x 48" W x 48" D
4 DOOR DESIGN

RACK SHELVES

- ☐ STANDARD RACK SHELVES
- ☐ SLIDING RACK SHELVES
- ☐ RACK SHELF SUPPORT

RACK DRAWERS

- ☐ RACK DRAWERS
- ☐ LAPTOP DRAWERS

RACK RAIL HARDWARE

- ☐ BLACK CLIP NUTS, #10-32, (100 EA.)
- ☐ #10/32 HIGH POINT SCREWS (100 EA.)
- ☐ M6 CAGE NUTS

OTHER OPTIONS

- ☐ 19" RACK COPPER BUSBAR
- ☐ VERTICAL RACK PDU

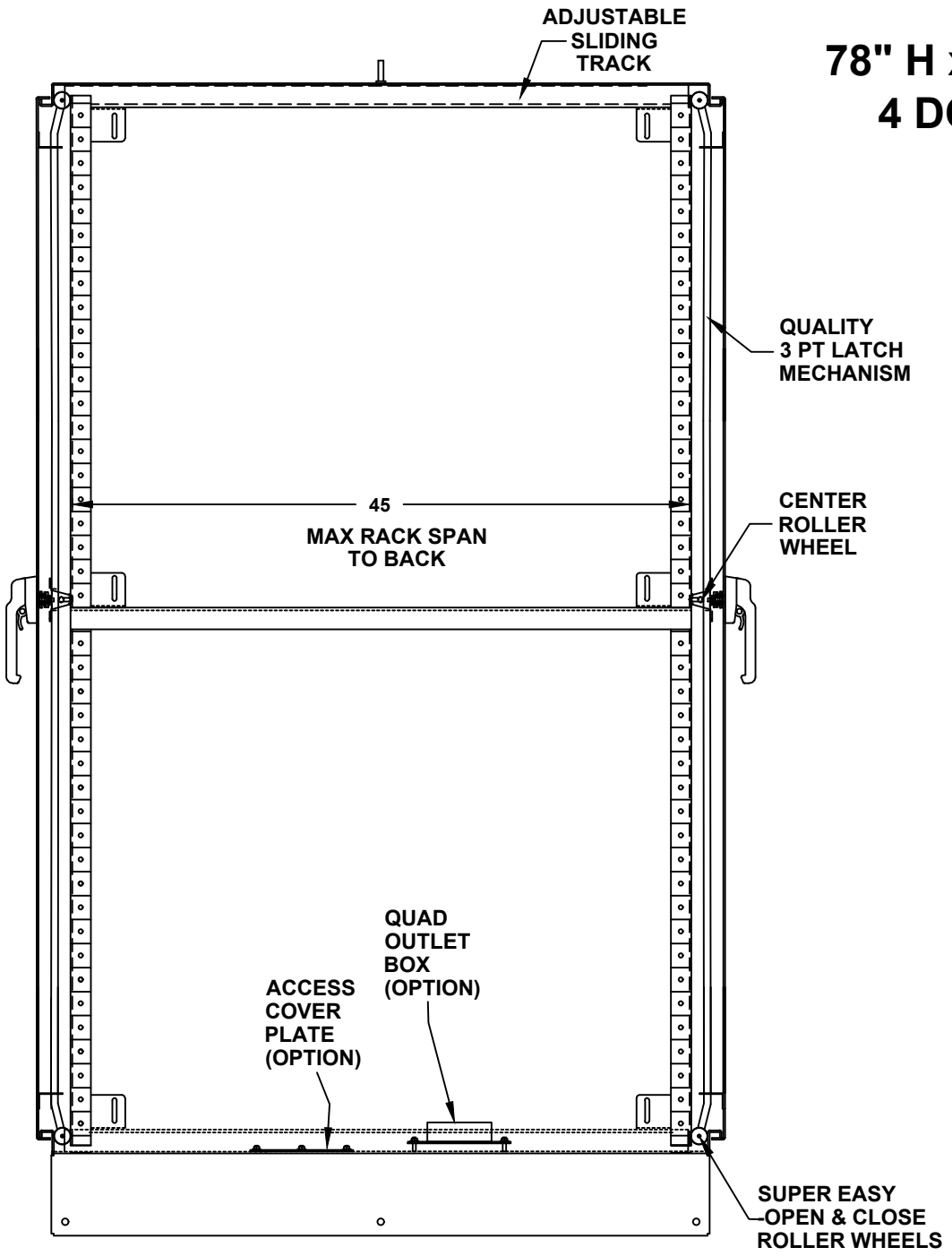

CROSS SECTION VIEW A-A

NEMACO™ ©2023

78" H x 48" W x 48" D
4 DOOR DESIGN

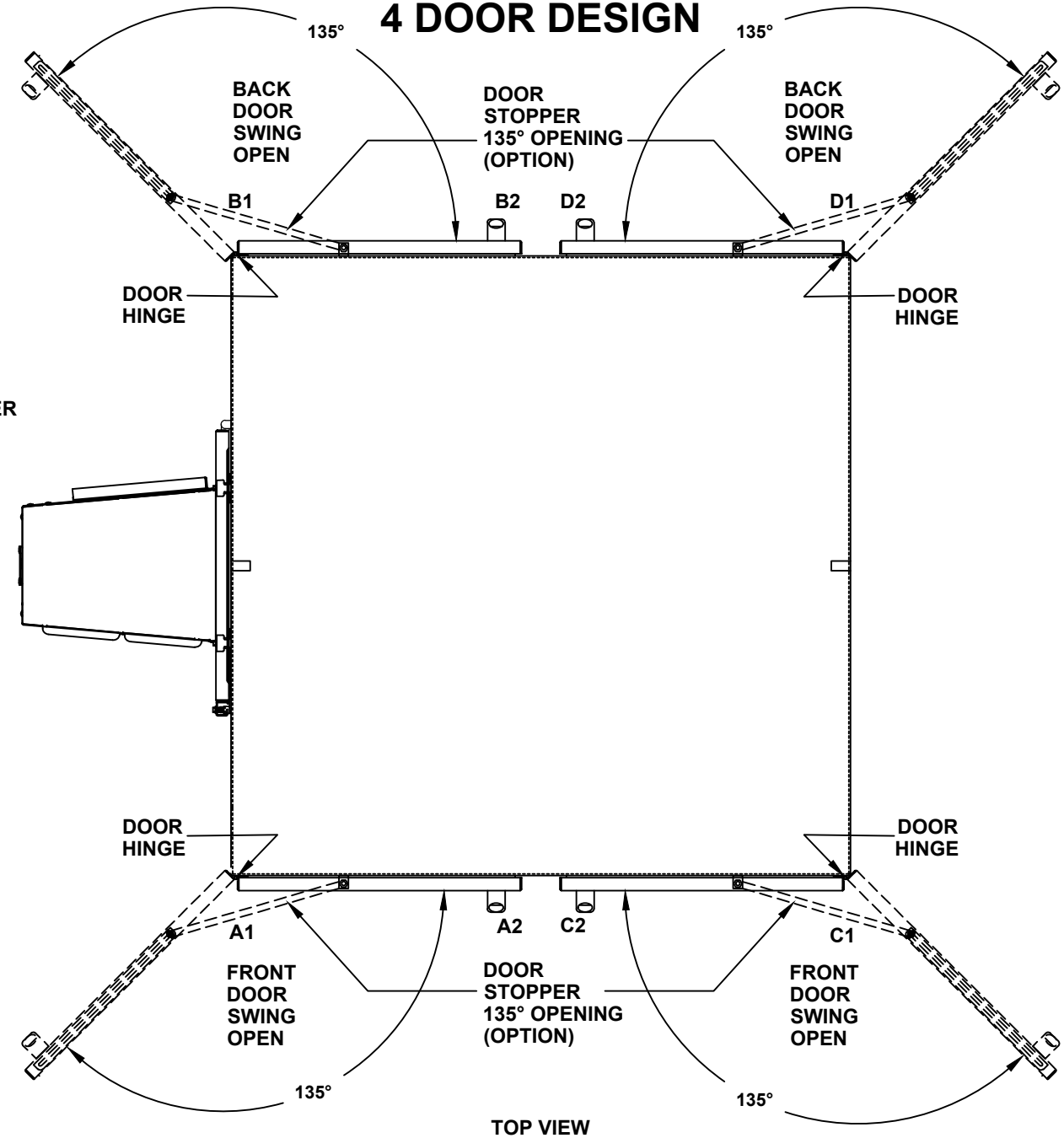

DOOR STOPPER

☐ INSTALL DOOR STOPPER

☐ NOT REQUIRED

TOP VIEW

NEMACO™ ©2023

78" H x 48" W x 48" D
4 DOOR DESIGN

SIDE ACCESS COVER PLATE MAT'L

- ☐ POWDER COATED STEEL
- ☐ POWDER COATED ALUMINUM
- ☐ STAINLESS STEEL, 304

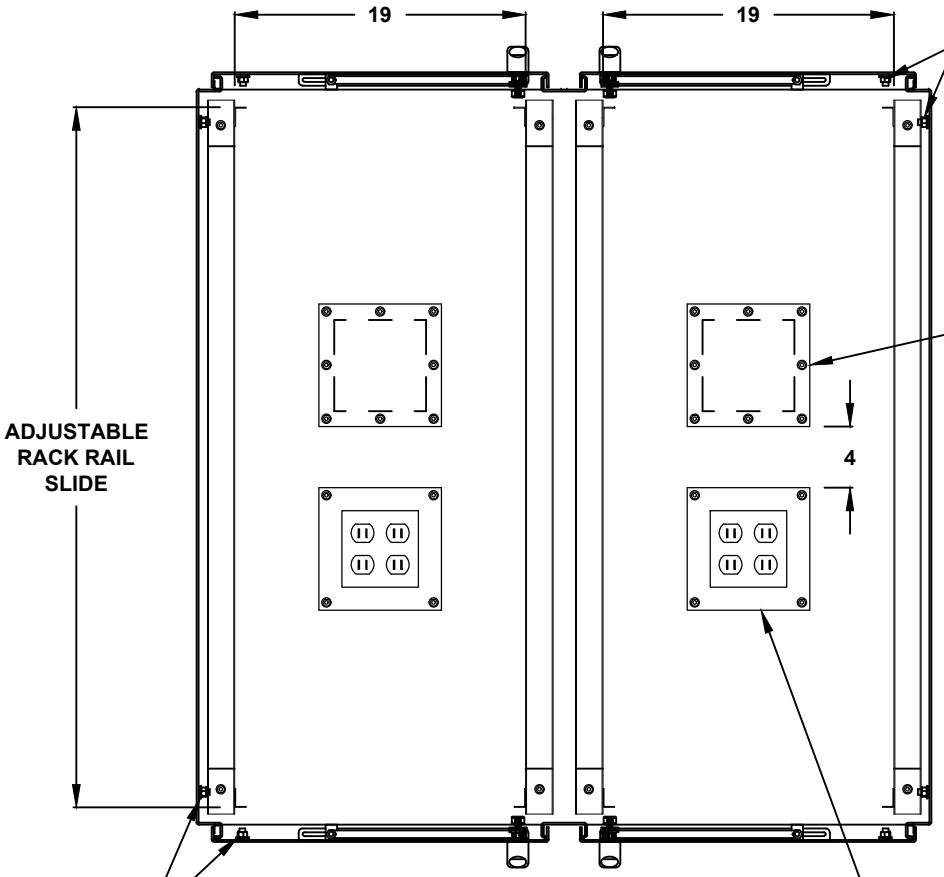

BASE ACCESS COVER PLATE (OPTION)

- ☐ 8x8 PLATE (6x6 CUT-OUT)
- ☐ 8x16 PLATE (6x14 CUT-OUT)
- ☐ 12x12 PLATE (10x10 CUT-OUT)
- ☐ 16x16 PLATE (14x14 CUT-OUT)

QUAD OUTLET BOX ON 8x8 PLATE (OPTION)

- ☐ ADD QUAD BOX
- ☐ NOT REQUIRED

OUTLET BOX AMP.

- ☐ 15A
- ☐ 20A

CONDUIT/CABLE SEAL OPTIONS

- ☐ ROXTEC SEAL SOLUTION
- ☐ PIPE FITTING HUB
- ☐ CABLE GLAND

TOP CROSS SECTION VIEW B-B

NEMACO™ ©2023

78" H x 48" W x 48" D
4 DOOR DESIGN

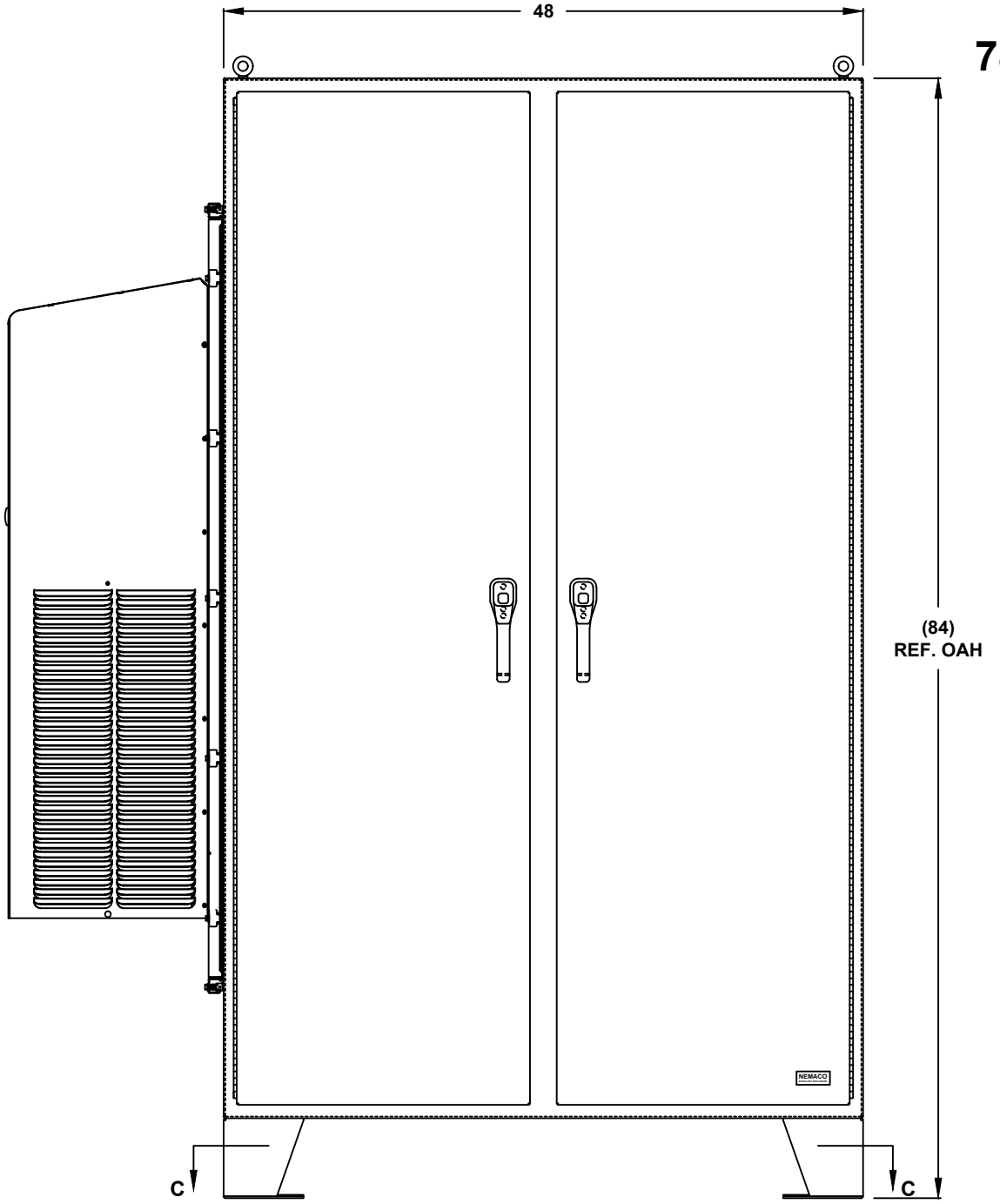

FRONT VIEW

NEMACO™ ©2023

N4-784848-F2DDXX19 (X2)

NEMACO™

Nemaco.com

78" H x 48" W x 48" D
4 DOOR DESIGN

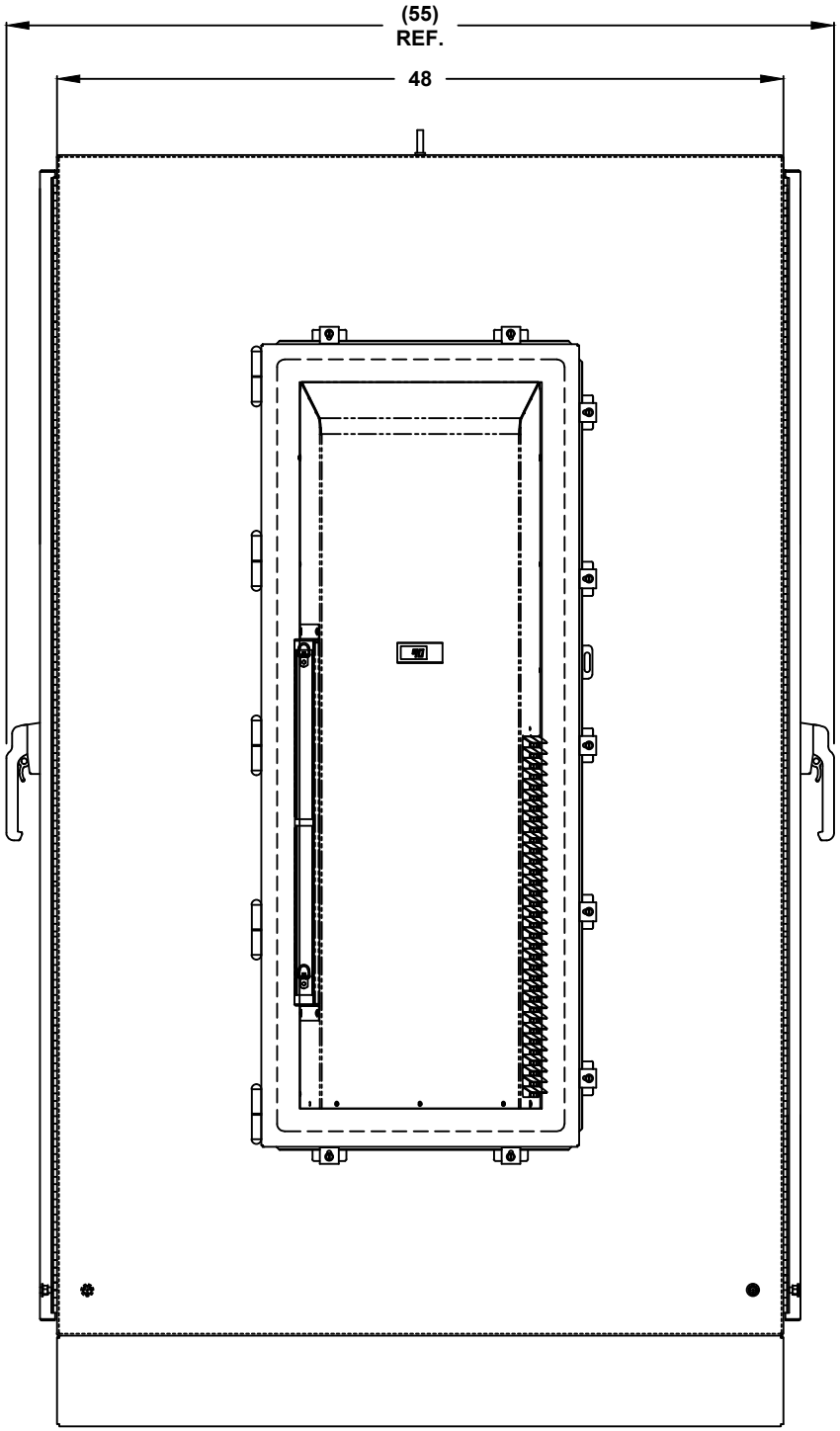

LEFT SIDE

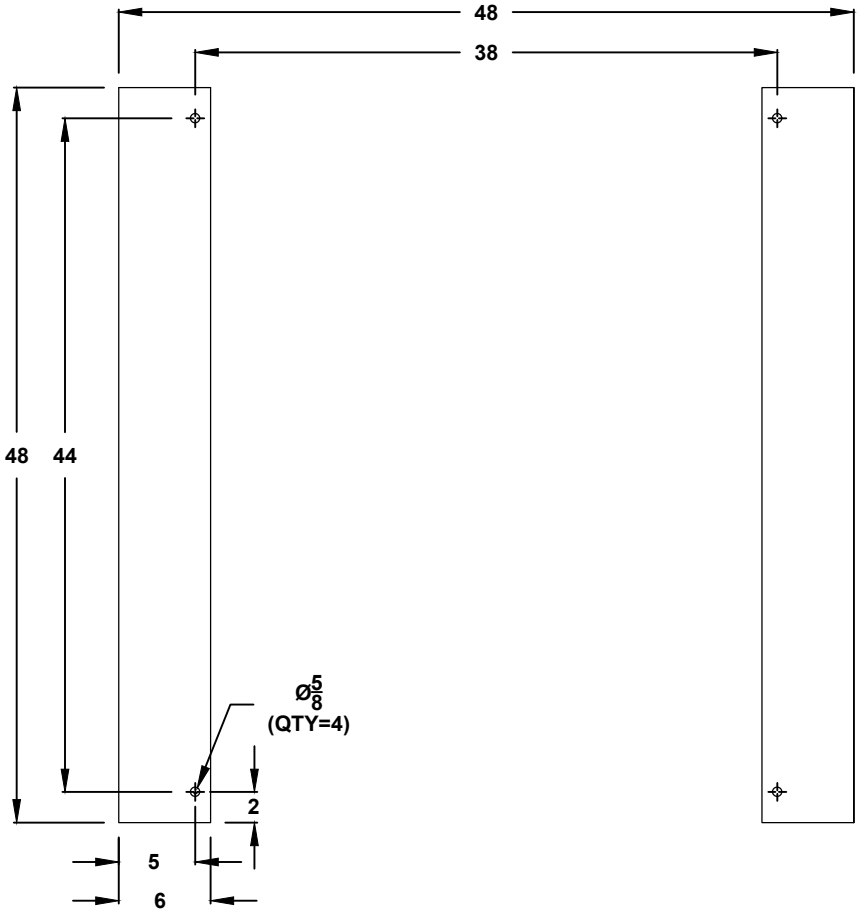

CROSS SECTION VIEW C-C
MOUNTING HOLES

NEMACO™ ©2023